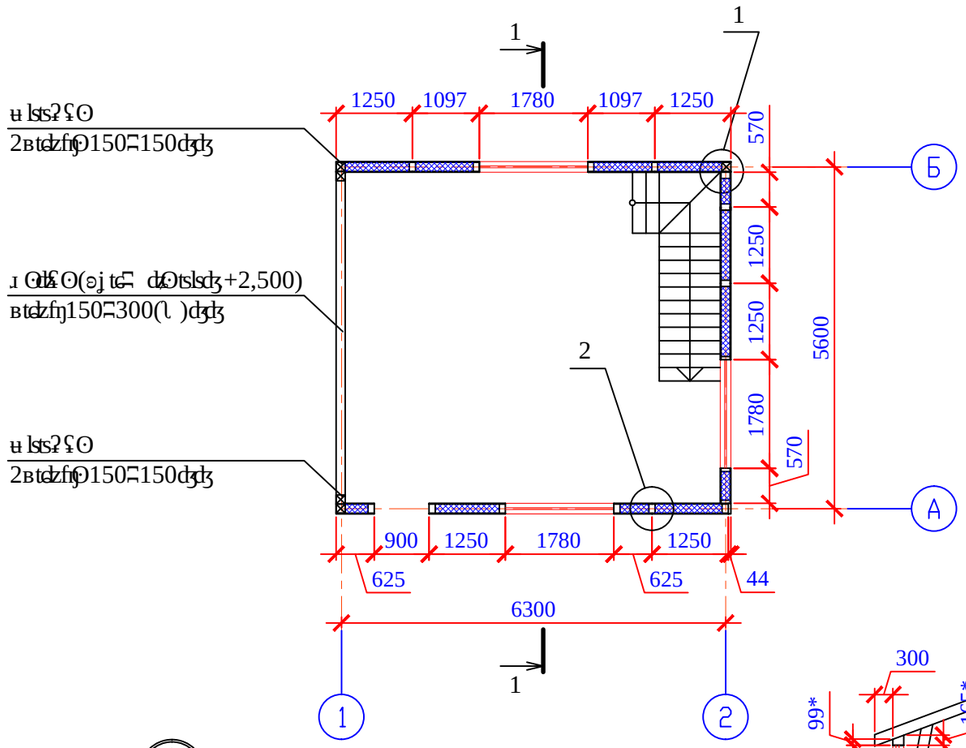

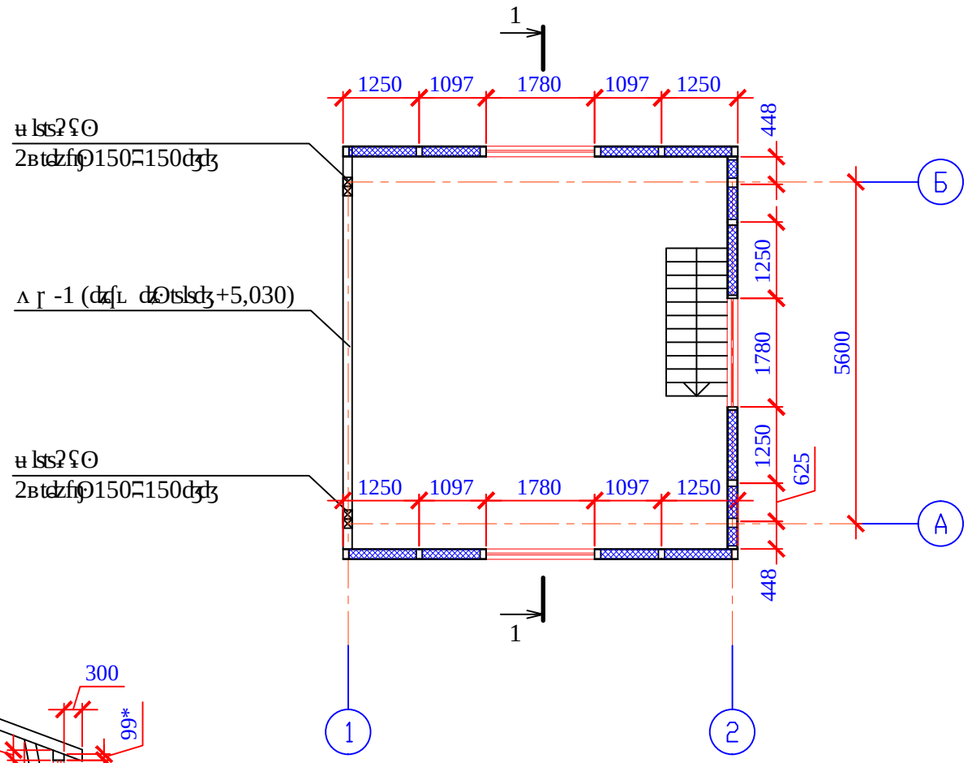

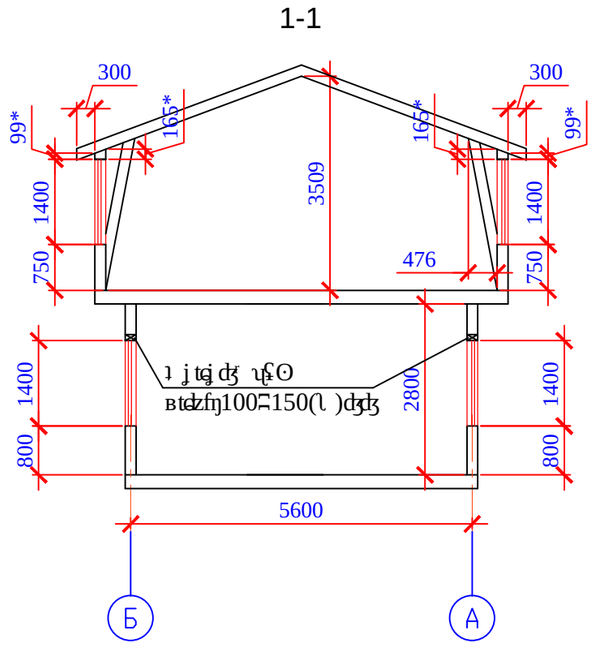

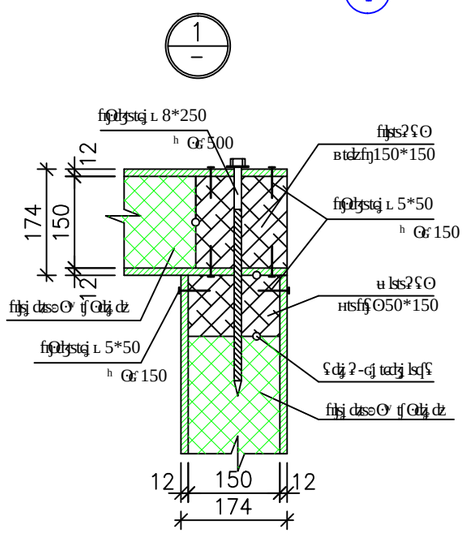

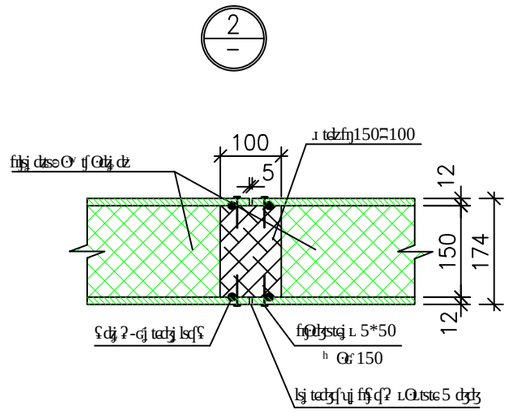

R LdZ	Ștsdzlzu ∫ cfrJs	¯ HtsC.	⅃ tsHtf.	⅃ CsO		R dzaCȘCHlzOdz dz ? ⅄ CdtsO HtsdZ		
⅃ r tftsdzdzfdz	⅃ OȘOtsȘ						⅃	2
						⅃ dzOdzteOfnJftsdtsȘ⅃ j dzaf^w tfOdzjdzj ? 1-dts, 2-dts ⅃ lsO⅃ j ? . ⅃ Ot ȘjL 1-1	∫ ∫ ∫ "H ∪ H"	